LOMAX® SYSTEM

MODULAR HOARDING AND FENCING SOLUTIONS
COMPACT | REUSABLE | FREESTANDING

INSTALLATION AND TECHNICAL GUIDE

ARC

Components

LOMAX STANDARD COUNTERWEIGHT
(HOARDING AND FENCING APPLICATIONS)

- 90x45mm (4x2) recess designed to receive either a vertical hoarding timber stud or a fencing support post
- Integrated metal plates to retain either the timber stud or the fencing support post
- 32mm OD holes to receive hoarding support posts or fencing panels
- Horizontal track to receive hoarding crossbeam support timbers
- Easy carry handles
- Interlocking shape for secure stacking
- 18Kg weight

HOARDING COMPONENTS

LOMAX SUPPORT POSTS – LARGE AND SMALL

- 2 x 32mm OD guide-prongs to slide into Full Sized Counterweight
- Galvanised steel construction for strength and durability
- Easy to stack, store and transport
- 5Kg weight

LOMAX DOUBLE SUPPORT POSTS

- 4 x 32mm OD guide-prongs to slide into double stacked Full Sized Counterweights
- Galvanised steel construction for strength and durability
- Easy to stack, store and transport
- 9Kg weight

FENCING COMPONENTS

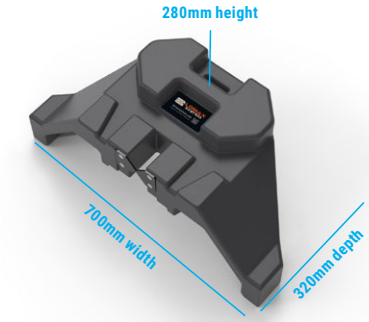

LOMAX SADDLE COUNTERWEIGHT

- 90x45mm (4x2) recess designed to receive fencing support post
- Integrated metal plates to retain the fencing support post
- Easy carry handles
- Interlocking shape for secure stacking on top of the Standard Counterweight
- 30Kg weight

LOMAX FENCING SUPPORT POSTS

- 90x45mm (4x2) shaped base to fit into the recess in the Counterweights
- Integrated panel clamp (separate loose clamp not required)
- Galvanised steel construction for strength and durability
- Easy to stack, store and transport
- 5Kg weight

Indoor Impact-Rated Hoarding: 1.8mH – 6mH

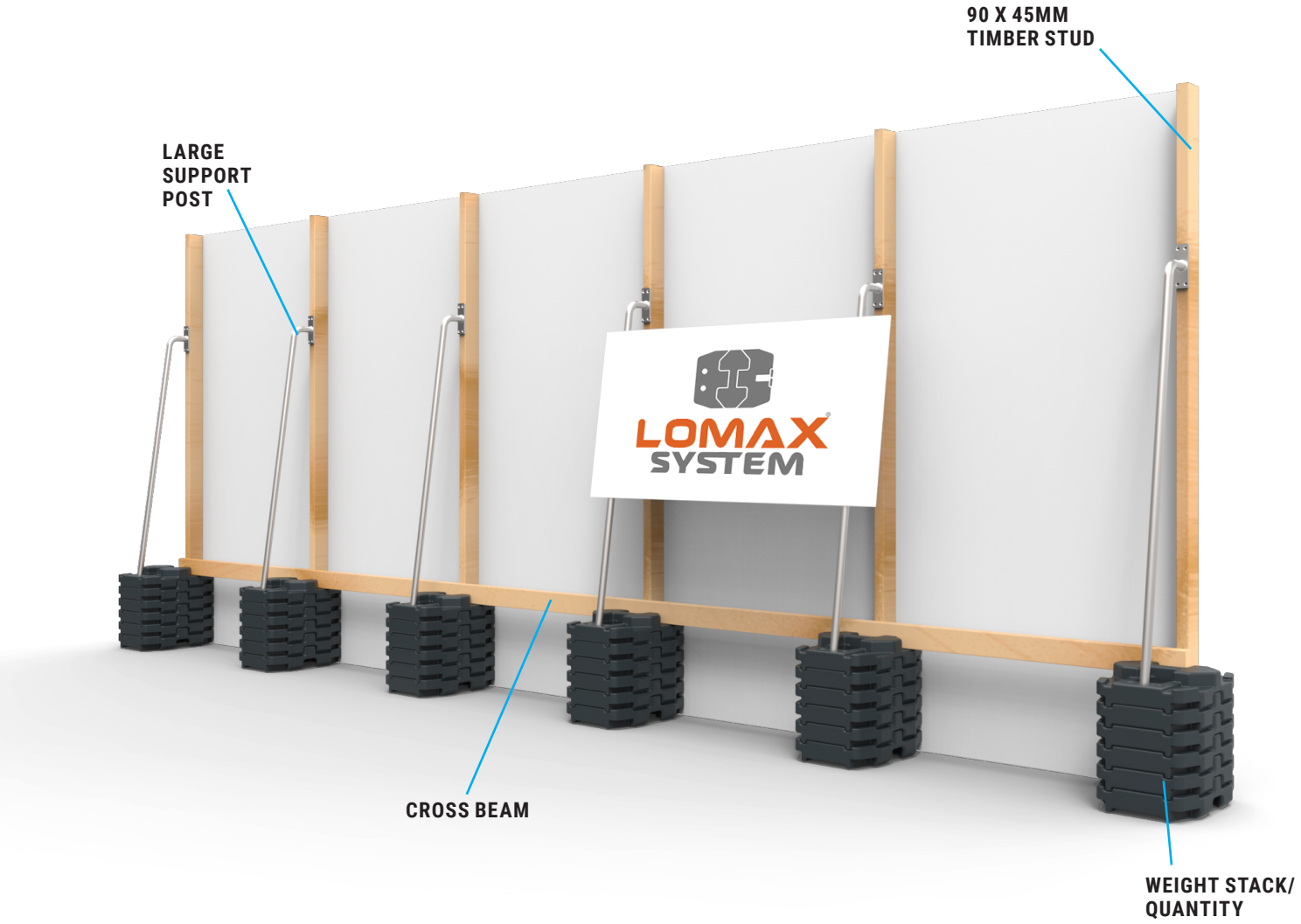

INDOOR HOARDING 'WEIGHT TO HEIGHT' GUIDE FOR COMPLIANCE TO AS4687				
SOLID PANEL HEIGHT – MAX (H)	STUD – 90 X 45 (4X2) MPG10	QUANTITY OF COUNTER-WEIGHTS PER STACK	MAX INTERVAL BETWEEN COUNTER-WEIGHT STACKS	CEILING, FLOOR OR SIDE BRACING REQUIREMENTS
1.2m	*90 x 45 MPG10*	*2*	*2.4mW*	*Freestanding – Not Required*
1.8m	*90 x 45 MPG10*	*3*	*1.2mW*	*Freestanding – Not Required*
2.4m	*90 x 45 MPG10*	*3*	*1.2mW*	*Freestanding – Not Required*
3m	*90 x 45 MPG10*	*4*	*1.2mW*	*Freestanding – Not Required*
3.6m	*90 x 45 MPG10*	*4*	*1.2mW*	*Freestanding – Not Required*
4m	*90 x 45 MPG10*	*5*	*1.2mW*	*Freestanding – Not Required*
4.6m	*90 x 45 MPG10*	*6*	*1.2mW*	*Freestanding – Not Required*
5m	*90 x 45 MPG10*	*8*	*1.2mW*	*Freestanding – Not Required*
5.6m	*90 x 45 MPG10*	*10*	*1.2mW*	*Freestanding – Not Required*
6m	*90 x 45 MPG10*	*12*	*1.2mW*	*Freestanding – Not Required*
Lower Cross-Brace and Support Post Required for all Certification – See LOMAX for Technical Guide / Build Process				

BUILD GUIDE FOR INDOOR AND OUTDOOR 'SINGLE STACK' HOARDINGS UP TO 6MH

1. Stack Lomax® counter-weights

2. Insert standard 90x45 (4x2) MPG 10 stud (non-ribbed)

3. Insert Lomax® Support Post

4. Attach panels

5. Add cross beam

ABOVE GUIDE IS FOR 'SINGLE WEIGHT STACK' CONFIGURATIONS ONLY. ADDITIONAL PRE-CERTIFIED 'DOUBLE STACK' CONFIGURATIONS ARE AVAILABLE. PLEASE CONTACT LOMAX HOARDING AND FENCING FOR TECHNICAL GUIDANCE.

	DETAILS	COMMENTS
HOARDING SYSTEM SPECIFICATIONS + REQUIREMENTS	*All Configurations Designed + Structural Engineer Tested to:*	*Indoor Impact tested: AS 4687:2022*
	Panel Height Options (All Freestanding)	*Indoor: 1.2mH – 8mH + Outdoor: 1.2mH – 4mH*
	Panel Thickness Options	*Min 12mm required*
	Panel Type Options	*Mdf, Particle, Ply, Melamine, EPS*
	Min Quantity of panels needed for certification	*3*
	Lomax Counterweight (Kg)	*Approx 18Kg each*
	Stack types	*Single or Double – See various illustrations*
	Double Stack Safety Rod (Only one per rear stack required)	*10mm rod / 50mm washer top and bottom / Bottom lock nut (see separate rod height guide)*
	Stud Requirements: 1.2mH – 6mH (Indoor) + 1.2mH – 4mH (Outdoor)	*Single vertical 90x45mm (4x2) MPG 10 (smooth / non-ribbed)*
	Stud Requirements: 6.1mH – 8mH (Indoor)	*Double vertical 90x45mm (4x2) MPG 10 (smooth / non-ribbed) – See joining guidelines*
	No movement Crossbeam Stud Requirements: 1.2mH – 6mH	*1 x horizontal 90x45mm (4x2) MPG 10 (smooth / non-ribbed) – see illustration*
	No movement Crossbeam Stud Requirements: 6.1mH – 8mH	*2 x horizontal 90x45mm (4x2) MPG 10 (smooth / non-ribbed) – see illustration*
	Screw Requirements: 1.2mH – 6mH (Indoor) + 1.2mH – 4mH (Outdoor)	*Min 40mm x 8g (to attach panels plus attach support post to vertical timber)*
	Screw Requirements 6.1mH – 8mH+ (Indoor)	*Min 40mm x 8g (to attach panels) + 50mm x 12g (to attach support post to vertical timber)*
	Screw Spacing: 1.2mH – 6mH (Indoor) + 1.2mH – 4mH (Outdoor)	*100mm from top and bottom of panels – then each 400mm-500mm in between*
	Screw Spacing 6.1mH – 8mH+ (Indoor)	*100mm from top and bottom of panels – then each 400mm in between*
	Screw Spacing and requirements for stud joining	*400mm Spacing – Staggered placement of 75mm x 14g Bugle (see illustration)*

Indoor Impact-Rated Hoarding: 6.1mH – 8mH

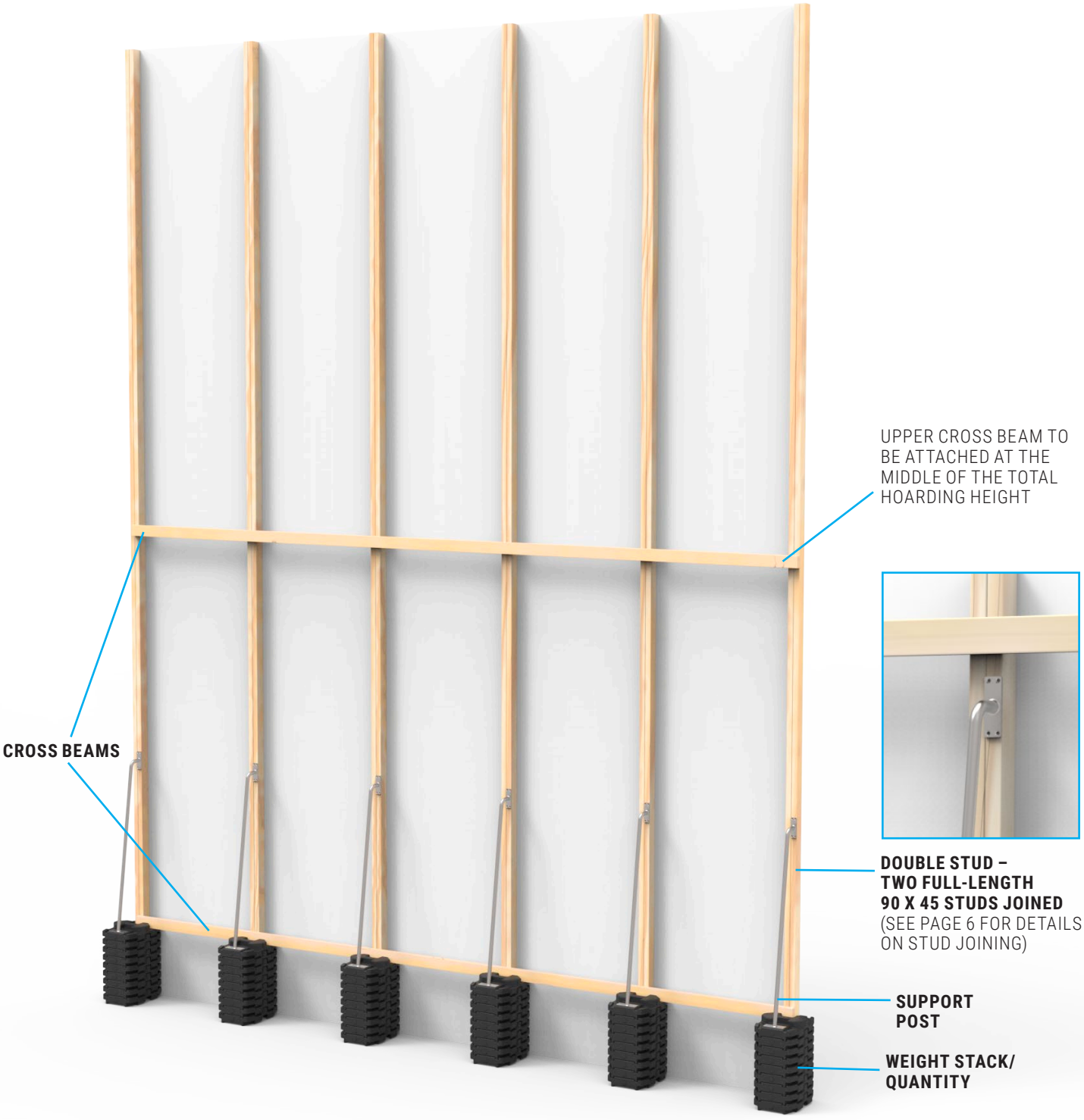

INDOOR HOARDING 'WEIGHT TO HEIGHT' GUIDE FOR COMPLIANCE TO AS4687

SOLID PANEL HEIGHT – MAX (H)	STUD – 90 X 45 (4X2) MPG10	QUANTITY OF COUNTER-WEIGHTS PER STACK	MAX INTERVAL BETWEEN COUNTER-WEIGHT STACKS	CEILING, FLOOR OR SIDE BRACING REQUIREMENTS
6.6m	*90 x 45 MPG10*	*16*	*1.2mW*	*Freestanding – Not Required*
7m	*90 x 45 MPG10*	*16*	*1.2mW*	*Freestanding – Not Required*
7.6m	*90 x 45 MPG10*	*20*	*1.2mW*	*Freestanding – Not Required*
8m	*90 x 45 MPG10*	*20*	*1.2mW*	*Freestanding – Not Required*
Lower Cross-Brace and Support Post Required for all Certification – See LOMAX for Technical Guide / Build Process				

Stud Joining

JOIN A STUD

>6.1MH – 8MH HOARDING

FULL HEIGHT DOUBLE STUD REQUIRED

EXTENDING A STUD

1.8MH – 6MH HOARDINGS

MIN 1.2M ABOVE / BELOW OVERLAP OF JOIN REQUIRED (MIN 2.4ML JOINING STUD)

SCREW SPACING

400MM SPACINGS – STAGGERED

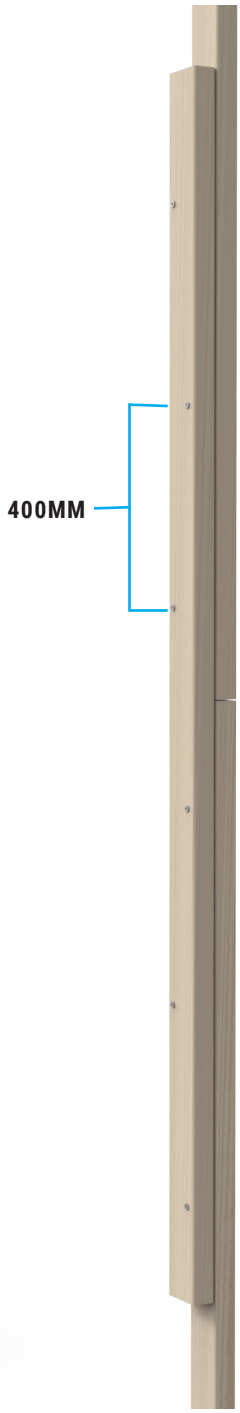

Door Fitting

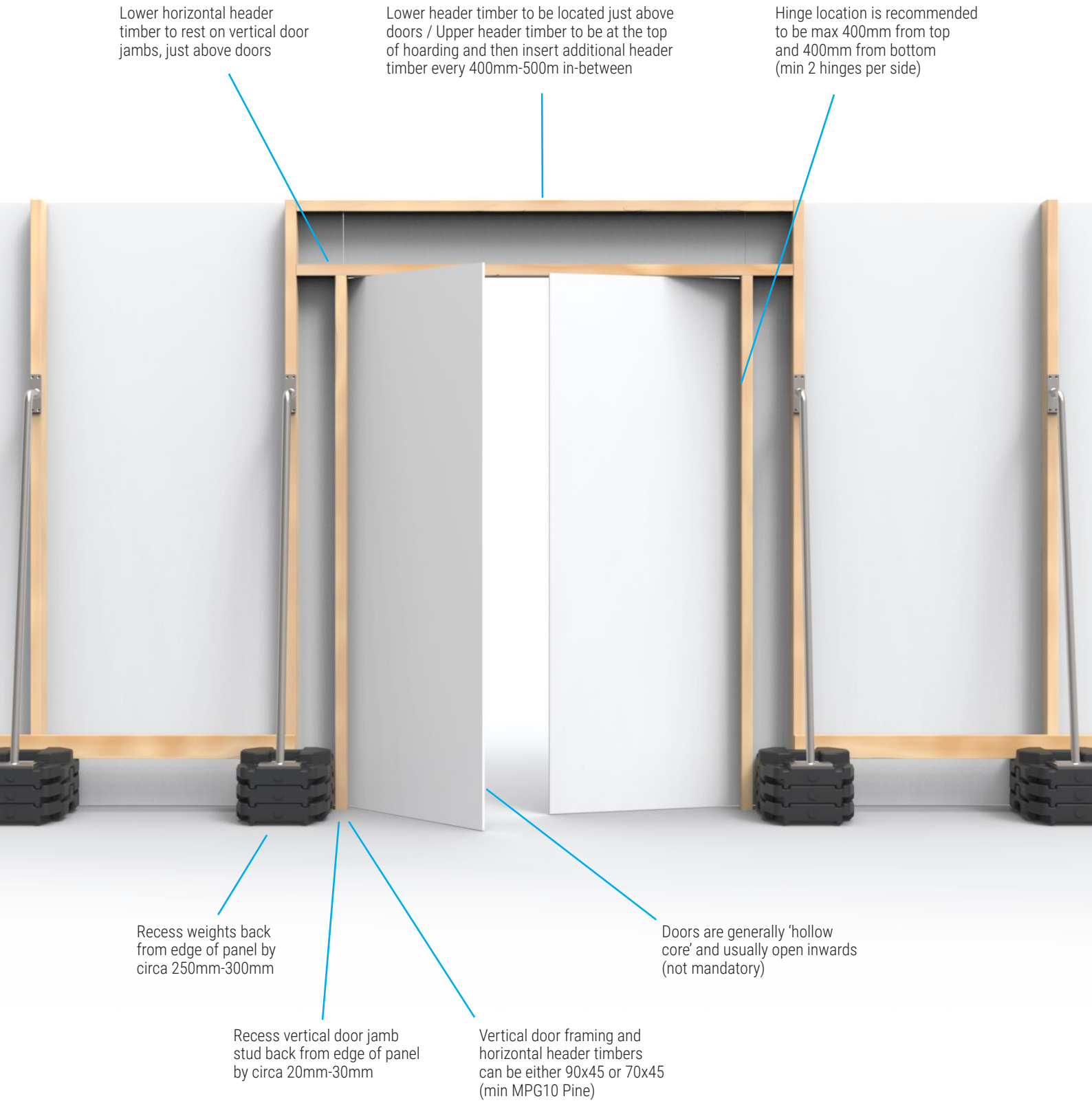

ILLUSTRATION SHOWS 2.4MH INDOOR HOARDING WITH 2MH DOOR AND 0.4MH TOP PANEL

Kiosk

LOW HEIGHT PERIMETER (1.2MH)

CONTAINMENT PERIMETER (2.4MH)

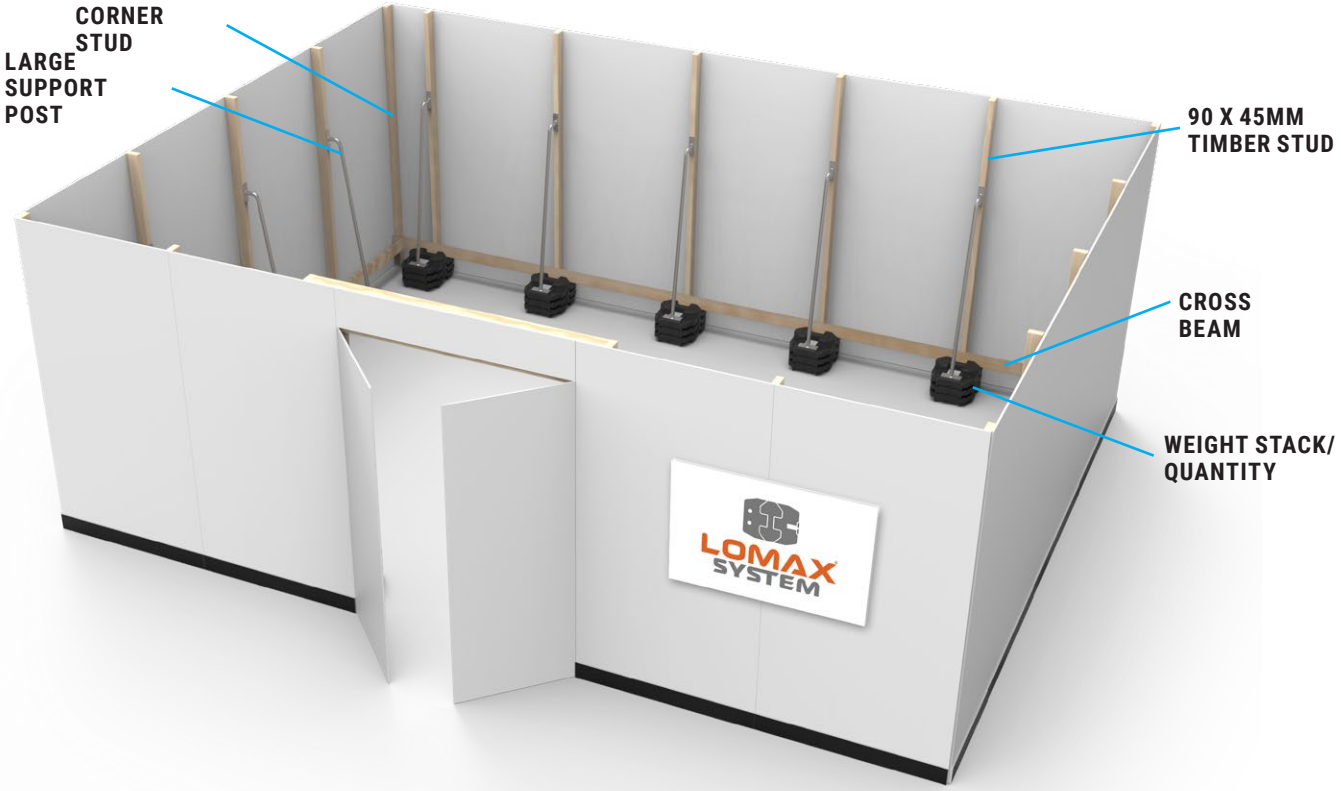

INDOOR HOARDING 'WEIGHT TO HEIGHT' GUIDE FOR COMPLIANCE TO AS4687

SOLID PANEL HEIGHT – MAX (H)	STUD – 90 X 45 (4X2) MPG10	QUANTITY OF COUNTER-WEIGHTS PER STACK	MAX INTERVAL BETWEEN COUNTER-WEIGHT STACKS	CEILING, FLOOR OR SIDE BRACING REQUIREMENTS
1.2m	*91 x 45 MPG10*	*2*	*2.4mW*	*Freestanding – Not Required*
2.4m	*92 x 45 MPG10*	*3*	*1.2mW*	*Freestanding – Not Required*
Lower Cross-Brace and Support Post Required for all Certification (Plus a 1.2mH kiosk requires top Cross-Brace)				

Outdoor Wind Rated Hoarding

SINGLE STACK

OUTDOOR HOARDINGS – SINGLE STACK – 'WEIGHT / HEIGHT/ WIND SPEED' EXAMPLES							
FREE-STANDING HOARDING OPTIONS FOR **SINGLE STACK OF COUNTERWEIGHTS @ 1.2MW INTERVALS**							
SOLID PANEL HEIGHT – MAX (H)	**STUD – 90 X 45 (4X2) MPG10**	**WIND SPEED 10M/S (36KPH)**	**WIND SPEED 11M/S (39.6KPH)**	**WIND SPEED 12M/S (43.2KPH)**	**WIND SPEED 13M/S (46.8KPH)**	**WIND SPEED 14M/S (50.4KPH)**	**WIND SPEED 15M/S (54KPH)**
1.8m	*90 x 45 MPG10*	*3*	*3*	*4*	*5*	*6*	*7*
2.4m	*90 x 45 MPG10*	*5*	*6*	*8*	*10*	*11*	*13*
3m	*90 x 45 MPG10*	*8*	*10*	*13*	*15*	*18*	*N/A*
3.6m	*90 x 45 MPG10*	*12*	*15*	*19*	*N/A*	*N/A*	*N/A*
4m	*90 x 45 MPG10*	*15*	*19*	*N/A*	*N/A*	*N/A*	*N/A*
FREE-STANDING HOARDING OPTIONS FOR **SINGLE STACK OF COUNTERWEIGHTS @ 0.6MW INTERVALS**							
SOLID PANEL HEIGHT – MAX (H)	**STUD – 90 X 45 (4X2) MPG10**	**WIND SPEED 10M/S (36KPH)**	**WIND SPEED 13M/S (46.8KPH)**	**WIND SPEED 15M/S (54KPH)**	**WIND SPEED 19M/S (68.4KPH)**	**WIND SPEED 21M/S (75.6KPH)**	**WIND SPEED 23M/S (82.8KPH)**
1.8m	*90 x 45 MPG10*	*3*	*3*	*4*	*6*	*8*	*10*
2.4m	*90 x 45 MPG10*	*3*	*5*	*7*	*12*	*14*	*17*
3m	*90 x 45 MPG10*	*4*	*8*	*11*	*18*	*N/A*	*N/A*
3.6m	*90 x 45 MPG10*	*6*	*12*	*16*	*N/A*	*N/A*	*N/A*
4m	*90 x 45 MPG10*	*8*	*14*	*20*	*N/A*	*N/A*	*N/A*
See 'Lomax System Outdoor Configurator' for full range of options							

Outdoor Wind Rated Hoarding

DOUBLE STACK

OUTDOOR HOARDINGS – DOUBLE STACK – 'WEIGHT / HEIGHT/ WIND SPEED' EXAMPLES							
FREE-STANDING HOARDING OPTIONS FOR **DOUBLE STACK OF COUNTERWEIGHTS @ 1.2MW INTERVALS**							
SOLID PANEL HEIGHT – MAX (H)	**STUD – 90 X 45 (4X2) MPG10**	**WIND SPEED 15M/S (54KPH)**	**WIND SPEED 19M/S (68.4KPH)**	**WIND SPEED 21M/S (75.6KPH)**	**WIND SPEED 23M/S (82.8KPH)**	**WIND SPEED 26M/S (93.6KPH)**	**WIND SPEED 29M/S (104.4KPH)**
1.8m	*90 x 45 MPG10*	*3+3*	*4+4*	*4+4*	*5+5*	*N/A*	*N/A*
2.4m	*90 x 45 MPG10*	*3+3*	*5+5*	*7+7*	*8+8*	*11+11*	*14+14*
3m	*90 x 45 MPG10*	*5+5*	*9+9*	*11+11*	*13+13*	*17+17*	*N/A*
3.6m	*90 x 45 MPG10*	*7+7*	*12+12*	*16+16*	*19+19*	*N/A*	*N/A*
4m	*90 x 45 MPG10*	*9+9*	*16+16*	*19+19*	*N/A*	*N/A*	*N/A*
FREE-STANDING HOARDING OPTIONS FOR **DOUBLE STACK OF COUNTERWEIGHTS @ 0.6MW INTERVALS**							
SOLID PANEL HEIGHT – MAX (H)	**STUD – 90 X 45 (4X2) MPG10**	**WIND SPEED 15M/S (54KPH)**	**WIND SPEED 19M/S (68.4KPH)**	**WIND SPEED 21M/S (75.6KPH)**	**WIND SPEED 23M/S (82.8KPH)**	**WIND SPEED 26M/S (93.6KPH)**	**WIND SPEED 29M/S (104.4KPH)**
1.8m	*90 x 45 MPG10*	*3+3*	*3+3*	*3+3*	*3+3*	*4+4*	*4+4*
2.4m	*90 x 45 MPG10*	*3+3*	*3+3*	*4+4*	*4+4*	*6+6*	*7+7*
3m	*90 x 45 MPG10*	*3+3*	*5+5*	*6+6*	*7+7*	*9+9*	*11+11*
3.6m	*90 x 45 MPG10*	*4+4*	*6+6*	*8+8*	*10+10*	*13+13*	*16+16*
4m	*90 x 45 MPG10*	*5+5*	*8+8*	*10+10*	*12+12*	*15+15*	*19+19*
See 'Lomax System Outdoor Configurator' for full range of options							

Double Stack Safety Rod Requirements

CRITICAL REQUIREMENTS

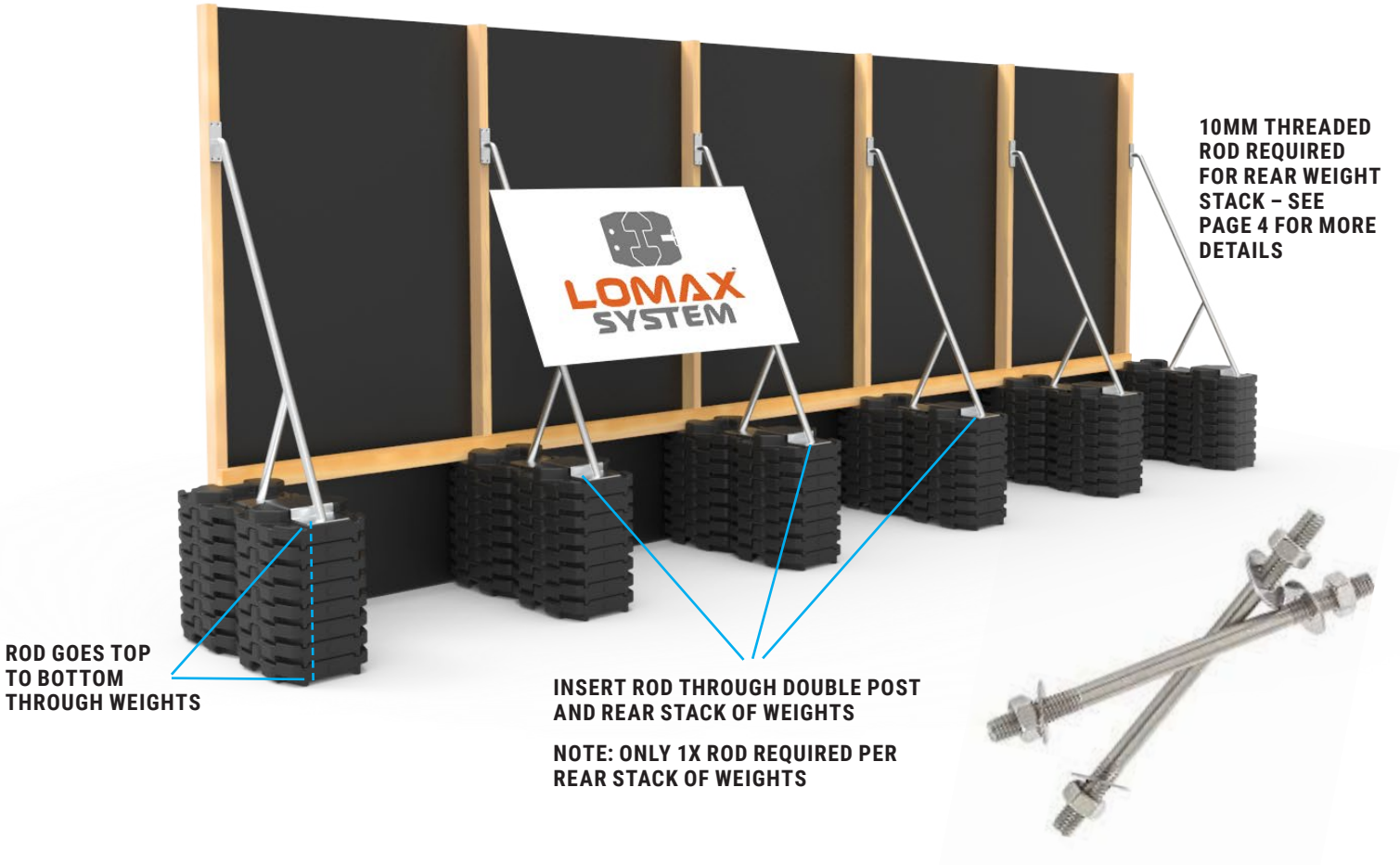

SAFETY ROD HEIGHT GUIDE	
QUANTITY OF COUNTERWEIGHTS STACKED UP	SAFETY ROD LENGTH REQUIRED FOR REAR STACK OF COUNTERWEIGHTS (M)
3+3	0.3
4+4	0.35
5+5	0.4
6+6	0.45
7+7	0.55
8+8	0.6
9+9	0.65
10+10	0.75
11+11	0.8
12+12	0.9
13+13	0.95
14+14	1
15+15	1.1
16+16	1.15
17+17	1.25
18+18	1.3
19+19	1.35
20+20	1.45

Lomax® – 'Safe Pedestrian Zone' Fencing Solution

LOMAX FENCING SYSTEM (INSTALLATION GUIDE)

1. Stack counterweights as per guide below

2. Insert standard 32mm OD fencing panel posts into post holes

3. Insert Lomax Fencing Support Post with integrated panel clamp

4. Stacks are placed inside to create a 'Safe Pedestrian Zone' outside the fence

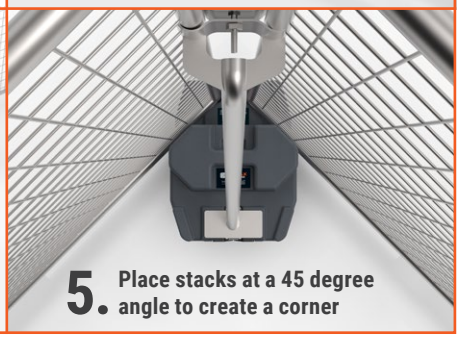

5. Place stacks at a 45 degree angle to create a corner

STRUCTURAL ENGINEERING TESTING – SAMPLE GUIDE FOR FENCING CONFIGURATIONS AND COUNTERWEIGHT OPTIONS

Configurations below are derived from numerous site-specific example configurations for Topography Multiplier | Shielding Class | Terrain Category | Shade Cloth
(Multiple alternative configurations are available – Your individual site specific location and conditions must be considered before deployment)

	Climb Test Pass (Y/N)	*Impact Test Pass (Y/N)*	*Aperture Test Pass (Y/N)*	*Stability Class 15m/s (54Kph)*	*Stability Class + 30% Shade Cloth*	*21m/s (75.6Kph)*	*24m/s (86.4Kph)*	*27m/s (97.2Kph)*	*30m/s (108Kph)*	*33m/s (118.8Kph)*	*36m/s (129.6Kph)*	*39m/s (140.4Kph)*
Base System	*Y*	*Y*	*Y*	*Y*	–	–	–	–	–	–	–	–
Base System + 1 x Saddle Weight	*Y*	*Y*	*Y*	–	*Y*	–	–	–	–	–	–	–
Base System + 2 x Saddle Weight	*Y*	*Y*	*Y*	–	–	*Y*	*Y*	–	–	–	–	–
Base System + 3 x Saddle Weight	*Y*	*Y*	*Y*	–	–	–	–	*Y*	–	–	–	–
Base System + 4 x Saddle Weight	*Y*	*Y*	*Y*	–	–	–	–	–	*Y*	*Y*	–	–
Base System + 5 x Saddle Weight	*Y*	*Y*	*Y*	–	–	–	–	–	–	–	*Y*	*Y*

Note: Base System = 2 x Lomax Full-Sized 18Kg Counterweights + 1 x Lomax Fencing Support Post every fence panel join @ max 2.4mW intervals. Saddle Weight = 30Kg
Fence panel used for testing was: RapidMesh 240x210cm 32mm OD Light-gauge Galvanised Steel Temp Fence Panel

SAFETY PRECAUTIONS / CHANGES OF ENVIRONMENT

As the purchaser and responsible installer of the various components of the 'Lomax System' it is paramount that due consideration is given to the location of any installation and that the appropriate system configuration deployed is fit for purpose. This consideration should include not only the existing location being considered but also any potential changes to that location that may occur during the lifecycle of the installation. **FOR EXAMPLE:** If a hoarding is being installed into an indoor location with the correct system configuration, then proper consideration should be made to understand if any 3rd party or external factors may be altered during the hoardings' lifecycle that may possible expose the hoarding to outdoor wind pressures. As an example, these changes could include removal of external walls or activations of base build exhaust systems and as such these additional factors should be considered when selecting the correct system configuration. The purchaser and installer are the responsible party to consider these factors so as to select the correct system configuration for existing and possible future site conditions.

GENERAL TERMS AND CONDITIONS

HOARDING: The intent of this document is to clearly describe and illustrate the build process and structural certification parameters of the various indoor and outdoor modular configurations for the Lomax System. Particular attention should be given to the screw type, screw spacing required and correct configuration selection based on both existing location factors and possible changes to those factors (such as wind impacts). **FENCING:** Due to the external nature of fencing installations that vary by location, wind levels, shade-cloth & signage requirements, no single guide can meet all scenarios. As such, these images are general and for illustration purposes only and additional guidance should be sought to ensure compliance prior to installation. **GENERAL:** By signing this Technical Guide, you as the purchaser and responsible installer confirm your understanding of the details within and acknowledge that any variation ensures that pre-certified compliance no longer applies.